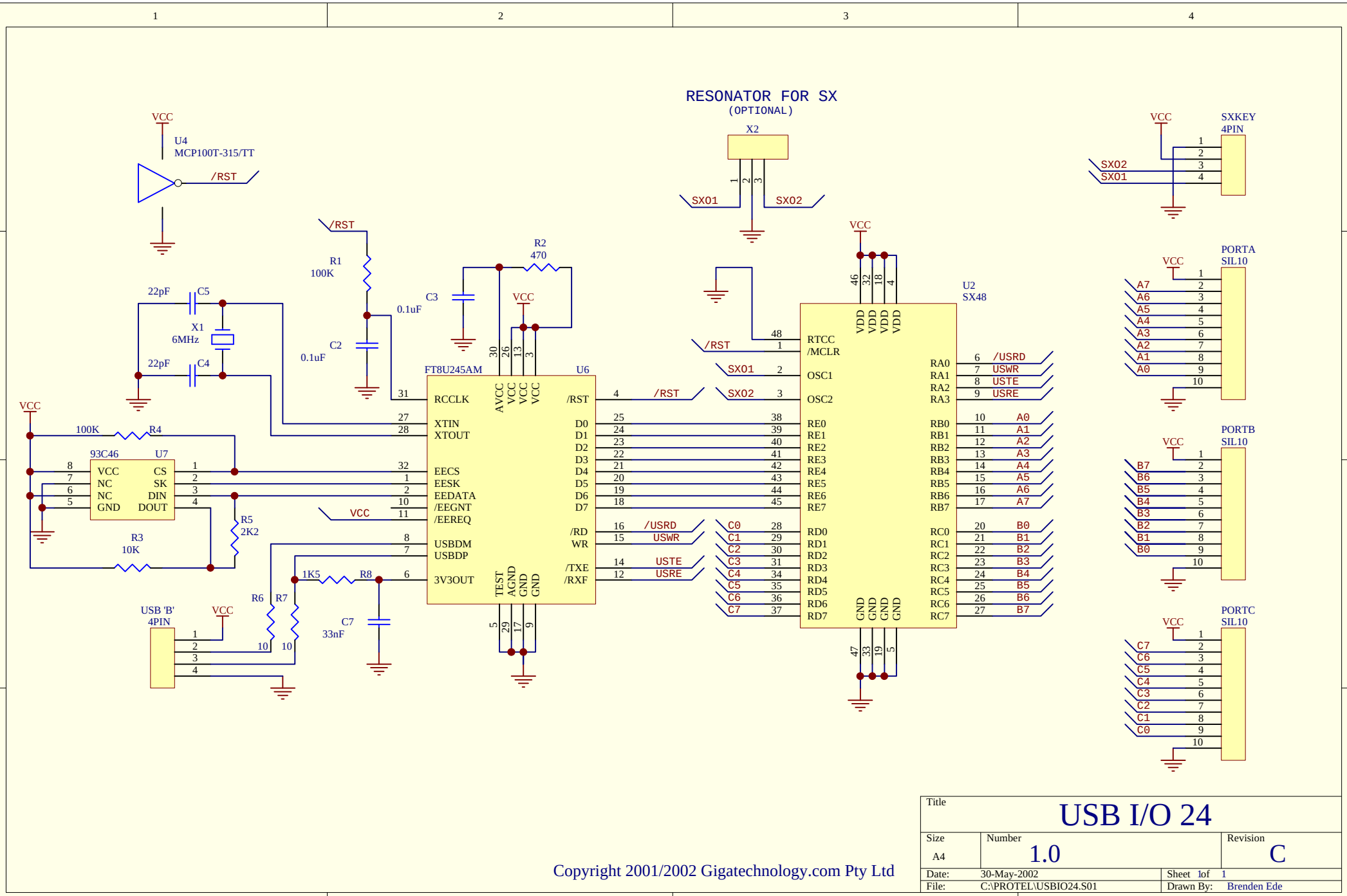

Copyright 2001/2002 Gigatechnology.com Pty Ltd

Title	USB I/O 24	
Size A4	Number 1.0	Revision C
Date: 30-May-2002		Sheet 1 of 1
File: C:\PROTEL\USBIO24.S01		Drawn By: Brenden Ede